COMPARATIVE ANALISYS OF TWO TIRE WHEEL TRACTION MODELS

ANALIZA COMPARATIVĂ A DOUĂ MODELE PENTRU TRACȚIUNEA ROȚII CU PNEU

ROŞCA R., CAZACU D., CLIM CARMEN
University of Agriculture Sciences and Medicine Veterinary Iasi

Abstract. *The paper presents some comparative results for two wheel traction models and experimental data. Complete soil rebound was taken into account for the first model and incomplete soil rebound was considered for the second model. A variable shear area, depending upon wheel slip, was also taken into account for some variants. A comparative analysis between the calculated net traction force and traction efficiency and experimental data has shown that the best fit with experimental data is given by the first model, when variable shear area is taken into account.*

Rezumat. *In cadrul lucrarii sunt dezvoltate doua modele de baza pentru tractiunea rotii cu pneu, aplicate tractorului U-650M; modelele permit determinarea fortei de tractiune si a randamentului tractiunii. Sunt luate in calcul mai multe moduri de repartizare a presiunii de contact pneu-sol, precum si modificarea ariei petei de contact in functie de patinarea rotii motoare. Rezultatele furnizate de catre modele au fost comparate cu rezultate experimentale, obtinute in cadrul lucrarii de arat executate cu agregatul tractor U-650 + plug P2V.*

TRACTION MODELS

The first traction model is based on the schematics shown in Figure 1. The model assumes that, under the vertical load (G), the wheel sinks into the soil, reaching depth (z_c) and the load induces tire deflection (z_p). As a result, the radius of the contact patch becomes r_d ($r_d > r_0$), and the circular length of the contact patch is:

$$l_c = 2\cdot\beta\cdot r_d = 2\cdot\alpha\cdot r_0 \quad (1)$$

From Figure 1 we get: $z = r_d \cdot [\cos(\beta - \varphi) - \cos\beta]$.

Using the Bekker equation [3] and assuming the tire is perfectly elastic, we finally obtain:

$$k \cdot \int_0^{2\beta} r_d^{n+1} \cdot [\cos(\beta - \varphi) - \cos\beta]^n \cdot d\varphi + \frac{4}{3} q_p \cdot \beta^3 \cdot r_d^2 = \frac{4}{3} \cdot q_p \cdot \alpha^3 \cdot r_0^2. \quad (2)$$

and also:

$$z_c = r_0 - z_p - r_0 \cdot \cos\beta \quad (3)$$

$$z_p = r_0 \cdot (1 - \cos\alpha) - r_d \cdot (1 - \cos\beta) \quad (4)$$

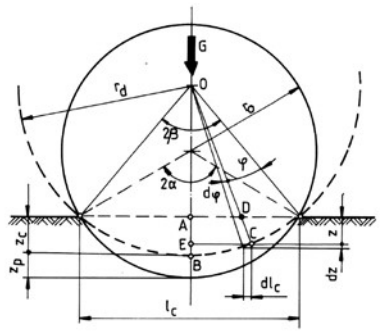

Figure 1 - Schematics of the first traction model

The system consisting of equations (1), (2), (3) and (4) is solved through an iteration process. Each calculation step begins with a guess value for the contact patch length l_c. Following the work of Upadhyaya & Wulfsohn [8], the contact patch is assumed to have an elliptical shape, with l_c the major axis and l_w the minor axis.

Tractor drive tires are lugged. Knowing the length of the contact patch and the distance between lugs, the following items are calculated:

- the lug-soil contact area A_{pr};
- the undertread-soil contact area $A_{br} = A_t - A_{pr}$.

A wheel on soft soil penetrates the ground until the resultant ground pressure equals the wheel vertical load. The general pressure-sinkage equation for this action is:

$$p = k \cdot z^n \quad [\text{kPa}], \tag{5}$$

where p is the tire-ground pressure. Depending on wheel load and soil condition, one of the following situations may occur:

- assuming that $p = \frac{G}{A_{pr}}$, from (7) we get $z < h_p$; in this case we conclude that there is incomplete lug penetration and there is no contact between the undertread and the soil.
- assuming that $p = \frac{G}{A_{pr}}$, from (7) we get $z \geq h_p$; in this case, we conclude that both the lugs and the undertread have contact with the soil and the normal pressure for the lugs (p_{pr}), for the undertread (p_{br}) and the effective wheel sinkage (z) must be calculated.

At the end of each calculation step the following condition is checked:

$$| z_c - z | \leq 0{,}001 \tag{6}$$

If the condition (5) is satisfied, it means that the true values for l_c, z_c and z_p were found; if it is not, the length l_c of the contact patch is increased with 1 mm and the calculation process is resumed.

It was assumed that the maximum traction force of the tire was limited only by the soil maximum shear strength τ_{max}. In order to evaluate the overall maximum shear strength the following formula was used [2]:

$$\tau_{max} = \frac{A_{pr}}{A_t} \cdot \tau_{max\,p} + \left(1 - \frac{A_{pr}}{A_t}\right) \cdot \tau_{max\,b} \tag{7}$$

According to Wulfsohn& Upadhyaya [7, 9] and Lach [5], the shear stress developed at the interface between the vehicle tire and the terrain is a function of shear displacement J.

$$\tau = \tau_{max} \cdot \left(1 - e^{-\frac{J}{K}}\right) \qquad J = \int_0^t v_P \cdot dt = r_0 \cdot \left[2 \cdot \beta - (1-s) \cdot \sin 2\beta\right] \qquad (8)$$

The traction force is given by the relation:

$$F_t = \tau \cdot A_t \qquad \text{[kPa].} \qquad (9)$$

According to ASAE S296 [10], the net traction force is:

$$F_{t,ef} = F_t - R_r \qquad \text{[kPa],} \qquad (10)$$

where R_r is the rolling resistance of the wheel.

According to ASAE S296, the traction efficiency is:

$$\eta_{tr} = \frac{F_{t,ef} \cdot v_r}{F_t \cdot v_t} = (1-s) \cdot \left(1 - \frac{R_r}{F_t}\right). \qquad (11)$$

Some authors [1], [4] consider the shear area as a function of slip:

$$A_{sh} = A_t \cdot \left[1 - (1-s) \cdot e^{-Y}\right], \qquad (12)$$

where $Y = c_1 \cdot l_c^{m_1} \cdot s^{m_2}$, with the values of the constants c_1, m_1 and m_2 depending upon the nature of the ground surface.

The second traction model uses the schematics shown in Figure 2, taking into account an incomplete soil rebound behind the wheel; the pressure – sinkage relation finally becomes [1]:

$$r_d = \frac{q_p \cdot l_c^2 \cdot (\cos\gamma)^{n+2}}{\frac{q_p \cdot l_c}{r_0} \cdot (\cos\gamma)^{n+2} - 6 \cdot k \cdot z_0^n} \qquad (13)$$

In the meantime we have:

$$x = r_0 - z_p - r_0 \cdot \cos\beta \Rightarrow z_0 = \cos\gamma \cdot (r_0 - z_p - r_0 \cdot \cos\beta), \qquad (14)$$

$$y = r_0 \cdot (1 - \cos\alpha) - r_d \cdot (1 - \cos\beta) \Rightarrow z_p = \cos\gamma \cdot \left[r_0 \cdot (1 - \cos\alpha) - r_d \cdot (1 - \cos\beta)\right], \qquad (15)$$

$$tg\gamma = \frac{z_1}{l_c}, \; z_1 = \frac{k}{k_u} \cdot z_0^n, \; \alpha = \frac{l_c \cdot \cos\gamma}{2 \cdot r_d}, \quad \beta = \frac{l_c \cdot \cos\gamma}{2 \cdot r_0} \qquad (16)$$

The system consisting of equations (13)…(16) is solved using an iteration process.

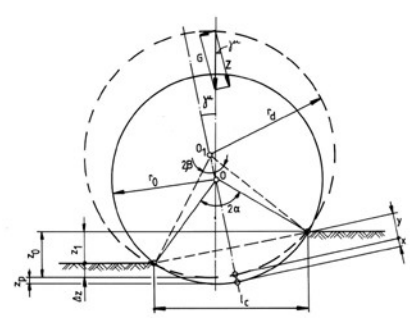

Figure 2 - Schematics of the second traction model

The contact patch area is calculated using the same equations as in the first model; the contact pressure is assumed to be constant on the surface of the lugs, while a parabolic distribution is taken into account for the undertread surface:

$$p(x) = a \cdot x^2 + b \cdot x + c, \quad x \in [0, l_c], \tag{17}$$

EXPERIMENTAL SETUP

For this work the Romanian U-650 tractor was modeled. Field experiments were conducted using the U-650 tractor, equipped with the P2V plow. Variation of plow width and depth allowed different traction forces and drive wheel slips to be obtained.

During the experiments, drive wheel slip and net traction force $F_{t,ef,r}$ were measured directly. The gross traction force and traction efficiency ($\eta_{tr,e}$) were determined assuming that $F_t = F_{t,ef,r} + R_r$, with a formula derived from ASAE S296 standard.

Soil characteristics for the test field are shown in Table 1. The theoretical calculations were performed using computer programs, for the variants summarized in Table 2.

RESULTS AND DISCUSSIONS

The calculated results concerning wheel sinkage and average pressure on lugs and undertread are shown in Table 3; the results concerning the traction force and traction efficiency are shown in Figure 3.

Table 1

Characteristics of the test soil

Item		Value
Soil deformation modulus, K [m]		0.05
Coefficients for the sinkage equation	k	55
	n	1.3
Soil cohesion, c [kPa]		25
Angle of internal friction, φ [^{0}]		32
Cone penetrometer index, CI [kPa]		970

Table 2

Working variants

Variant no.	Model no.	Pressure distribution on the undertread	Variable shear area
1	2	constant	no
2	2	parabolic	no
3	2	parabolic	yes
4	1	-	no
5	1	-	yes

Table 3

Comparison of calculated results

Var.	l_c [m]	r_d [m]	p_{pr} [kPa]	p_{br} [kPa]	τ_{pr} [kPa]	τ_{br} [kPa]	τ_{max} [kPa]	z_c [m]
1	0.622	1.203	304.41	71.93	215.1	69.9	120.54	$3.72 \cdot 10^{-2}$
2	0.622	1.203	304.41	71.93	215.1	52.93	116.16	$3.72 \cdot 10^{-2}$
3	0.622	1.203	304.41	71.93	215.1	52.93	116.16	$3.72 \cdot 10^{-2}$
4	0.598	0.941	312.63	77.85	220.23	73.61	124.33	$3.806 \cdot 10^{-2}$
5	0.598	0.941	312.63	77.85	220.23	73.61	124.33	$3.806 \cdot 10^{-2}$

From Figure 3 it is clear that variant no. 5 (first traction model, with variable shear area) gives the best fit with the experimental results (for both traction force and traction efficiency), at least for 8….30% wheel slip. The average differences between calculated and measured data did not exceed 0.25…0.4 kN for the traction force and 4…5% for the traction efficiency.

According to variant no. 5, the maximum traction efficiency is reached when wheel slip is comprised between 10 and 17%; these predictions were confirmed by the experimental data (Figure 3b). Referring to the traction force (Figure 3a), the best fit between model and experimental data is also achieved when wheel slip is within the above mentioned range. In the meantime, variant no.5 leads to the higher values of the tire-ground pressure, shear strength and sinkage into the soil (Table 3). Lower values for the contact patch area are achieved when wheel slip is within the tested range; for 10…17% wheel slip, the contact patch area has values between 0.0286 and 0.0405 m^2, compared to 0.0618 m^2 for the constant area assumption.

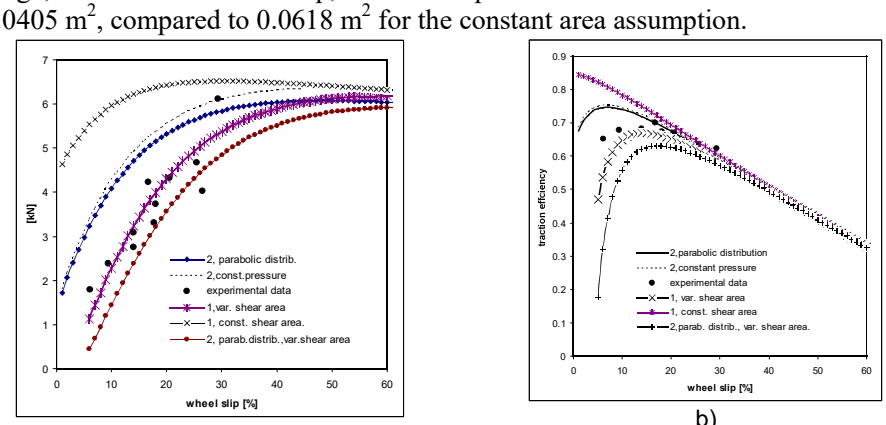

a) b)

Figure 3 Comparison between experimental and calculated data
a-traction force; b-traction efficiency

Both experimental and calculated data show that the maximum traction efficiency is reached for traction forces between 2.5and 3.7 kN (Figure 4).

The tire – ground contact pressure profile for variant no. 5 is shown in Figure 5; obviously, a parabolic pressure distribution may be assumed (see the trendline).

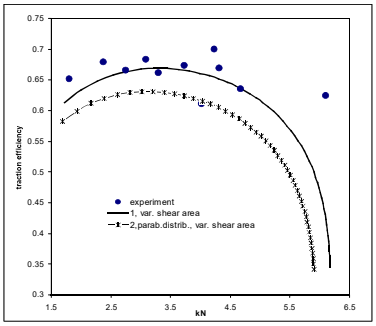

Figure 4 Traction efficiency vs. traction force

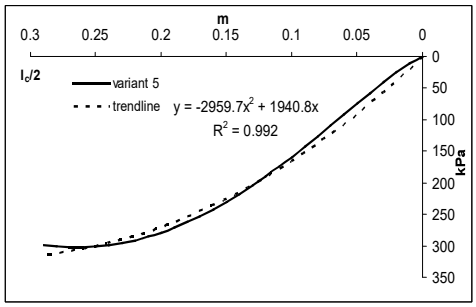

Figure 5 Tire-ground contact pressure

CONCLUSIONS

1.Two models for off-road tire traction were developed; for the both models, tire deflection under load was taken into account by replacing the real wheel with an imaginary one, with a larger radius.

2.The resultant systems of equations were solved using computer programs, through iterative processes.

3.The models were applied to the driving wheel of a Romanian tractor and were compared with the experimental results.

4.The first model (complete soil rebound behind the wheel) with variable shear area (variant no.5) gave the best fit between model and experimental data, for 8….30% wheel slip, while the tire-ground contact pressure may be assumed to have a parabolic distribution.

5.Both the experimental and calculated data show that the maximum traction efficiency of the drive wheel is achieved for 10…17% wheel slip.

REFERENCES

1. **Abd El-Gawwad et al.,** 1999 - *Off-road tyre modelling IV: extended treatment of tyre-terrain interaction for the multi-spoke model,* Journal of Terramechanics, 36, p. 77-90. Elsevier Science, Amsterdam.
2. **Adams B. T.,** 2002 - *Central tire inflation for agricultural vehicles,* Ph.D. Thesis, Graduate College, Univ. of Illinois at Urbana – Champaign.
3. **Bekker G.M.,** 1969 - *Introduction to terrain-vehicle systems,* Univ. of Meichigan Press, Ann Arbor.
4. **Komandi G.,** 1993 - *Reevaluation of the adhesive relationship between the tire and the soil,* Journal of Terramechanics, 30/2, p. 77-83.
5. **Lach B.,** 1996 - *The influence of tire inflation pressure – a comparison between simulation and experiment,* 1st East European Conference of the ISTVS, Wroclaw.
6. **Schmid I. C**., 1995 - *Interaction of the vehicle terrain results from 10 years research at IKK,* Journal of Terramechanics, 32/1, p. 3-27. Elsevier Science, Amsterdam.
7. **Upadhyaya, S.K., Dvoralai Wulfson -Jubbal, G.,** 1989 - *Traction prediction equations for radial ply tyres,* Journal of Terramechanics, 26/2, 149-175. Elsevier Science, Amsterdam.
8. **Upadhyaya S.K., Dvoralai Wulfson,** 1990 **-** Relationship between tire deflection characteristics and 2-D tire contact area". Transactions of the ASAE, 33/1, 25-30. St. Joseph, Michigan.
9. **Wulfson Dvoralai, Upadhyaya S.K.,** 1992 - *Prediction of traction and soil compaction using three-dimensional soil-tyre contact profile,* Journal of Terramechanics, 29/6, p. 541-564. Elsevier Science, Amsterdam.
10. *****,** 1999 **-** ASAE D497.7, *Agricultural Machinery Management Data*", St.Joseph, Michigan, U.S.A.